INFORMATION TABLE

Type of profile	Visible element [mm]	Joint width [mm]	Height of profile [mm]	Material	Load bearing capacity lorris (DIN 1072) [kN]	Load bearing capacity forklift trucks (DIN 1055) [kN]	Load bearing capacity vehicles with solid plastic tyres [kg/mm]	Movements horizontal/vertical [mm]
HDS 230.20.25	230	50	25	Aluminum	600	130	15	40(±20)/30(±15)

CONECTO HDS 230.20.25
VIEW

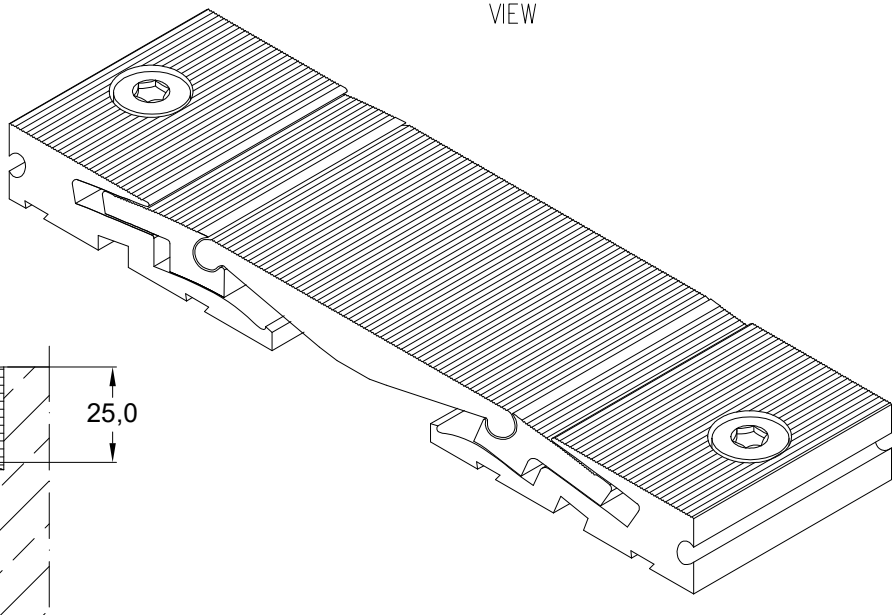

CONECTO HDS 230.20.25
SECTION

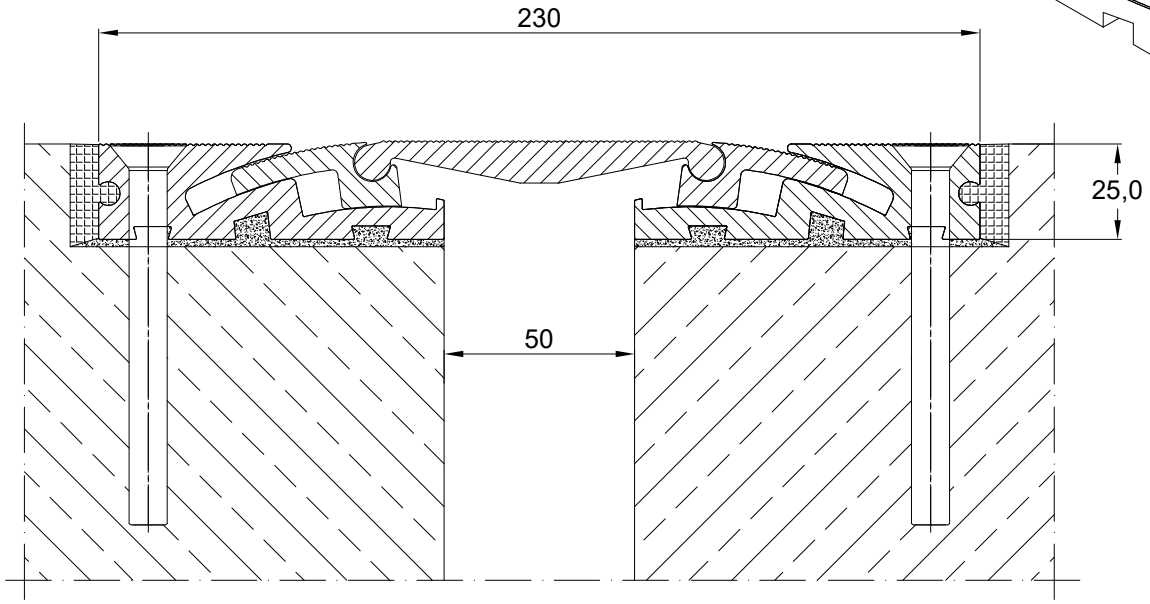

Expansion joint
Conecto HDS 230.20.25

Conecto Profiles Sp. z o.o.
ul. Przemysłowa 39
61-541 Poznań
www.conecto-profiles.com

ROZMIAR / SIZE	SKALA / SCALE		PROJEKT PROJECT	ZŁOŻENIE SUB ASSEMBLY	RYSUNEK DRAWING	ARKUSZ SHEET	WER REV
A3	1:1	Wszystkie wymiary podano w [mm] All dimensions in [mm]	--	--	01	1 Z OF 1	